REVISIONS			
LTR	DESCRIPTION	DATE	APPROVED

DETAIL 7

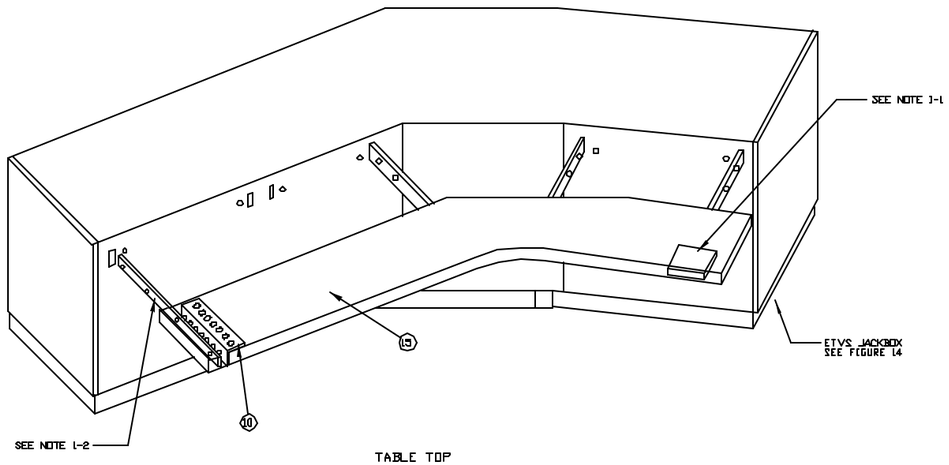

TABLE TOP

VIEW B-B

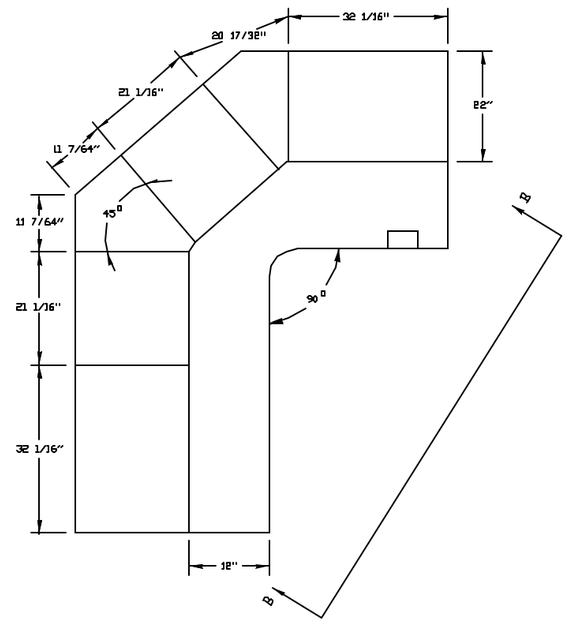

FIGURE 10

NOTES:

1-1. INSTALL AS PER ETVS TECHNICAL DATA PACKAGE, APPENDIX B-15 (ETVS JACKBOX CUTOUT, REV 2)

1-2. TOP BAR SUPPORT SUPPLIED WITH FIND #15.

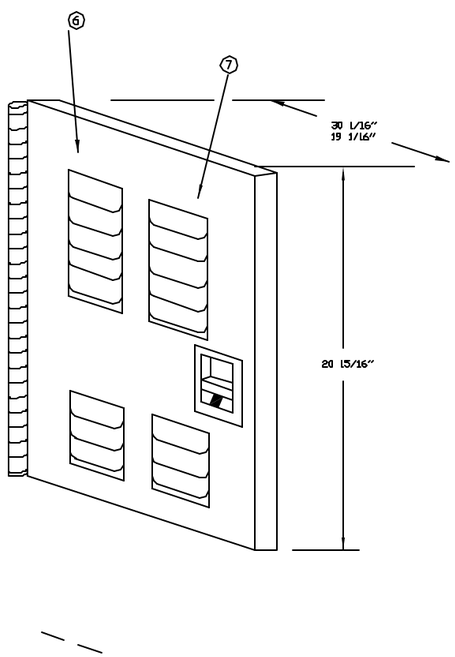

REAR VIEW

FIGURE 11

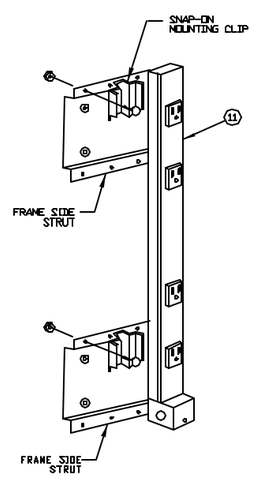

INSIDE VIEW

FIGURE 12

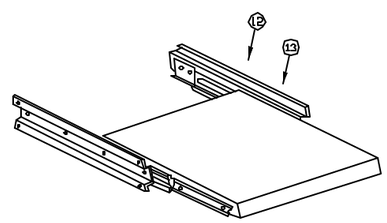

FIGURE 13

DISTRIBUTION AUTHORIZED TO U.S. GOVERNMENT AGENCIES AND THEIR CONTRACTORS; FOR ADMINISTRATIVE OR OPERATIONAL USE, 1 MAY 1986. OTHER REQUESTS FOR THIS DOCUMENT SHALL BE REFERRED TO 38 MSS/EGD.

NEXT ASSEMBLY	USED ON
APPLICATION	

UNLESS OTHERWISE SPECIFIED DIMENSIONS ARE IN INCHES-TOLERANCES ON FRACTIONS ± DECIMALS .XX ±.XXX ANGLES ±

DR	ALLISON	06 JAN 98
CHK	MILLER	07 JAN 98
ENG	LT VILLA	11 JAN 98

AIR FORCE AUTHENTICATION: RINDER 07 JAN 99

AIR FORCE RELEASE

U.S. AIR FORCE
38 ENGINEERING INSTALLATION WING (AFMC)
38 MSS/EGD TINKER AFB, OK 73145-2713

TITLE
AIR TRAFFIC CONTROL TOWER
WRAP AROUND CONSOLE
MCP PROGRAM

SIZE	AIR FORCE CODE IDENT NO	DRAWING NO.
D	14941	SK SCCS-3

SCALE NONE | SKSCCS07.DGN | SHEET 7 OF 8