REVISIONS			
LTR	DESCRIPTION	DATE	APPROVED

DETAIL 2

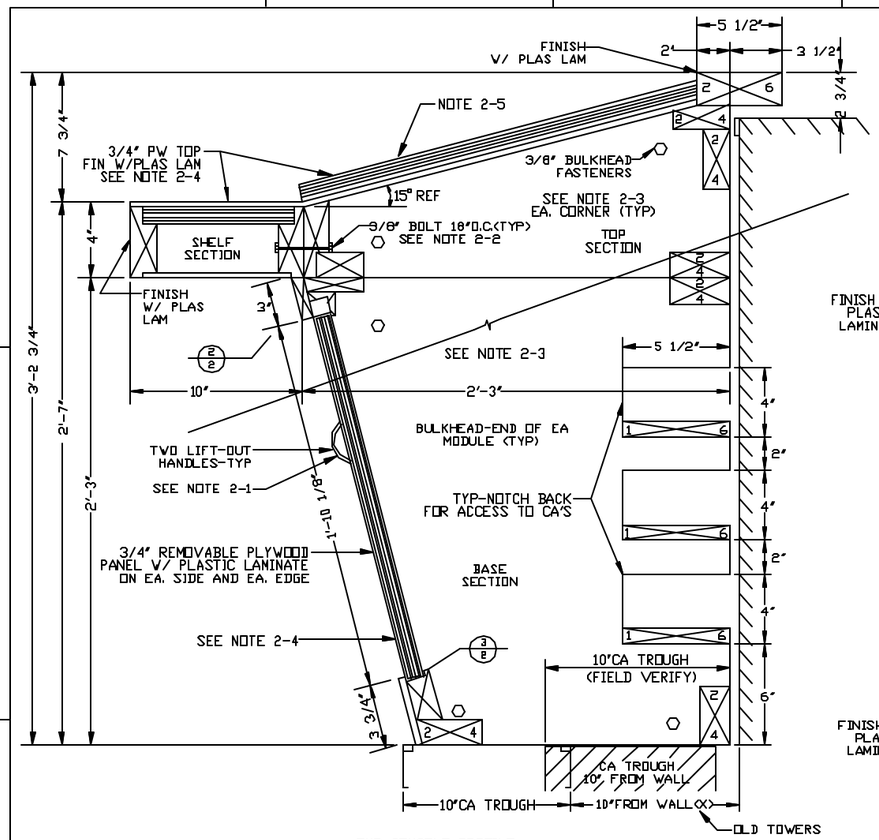

TYP CONSOLE PROFILE

NOTE 2-5

FIGURE 2

SCALE 1"=4"

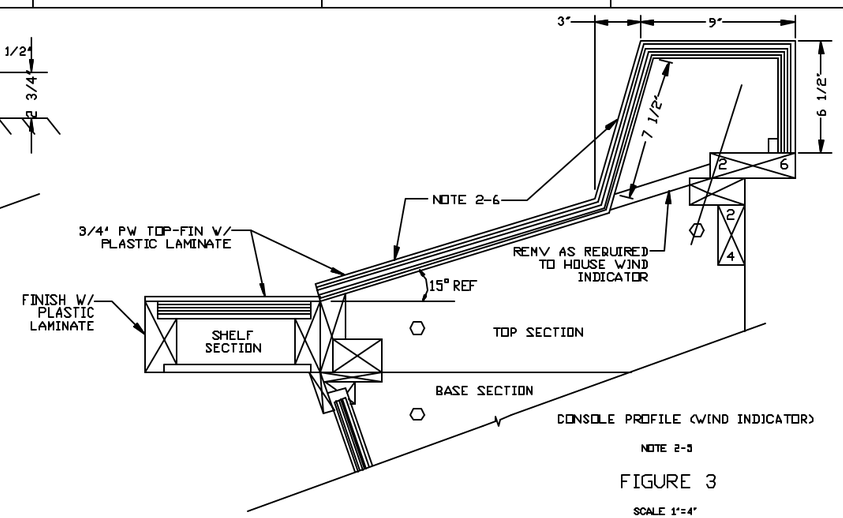

NOTE 2-5

FIGURE 3

SCALE 1"=4"

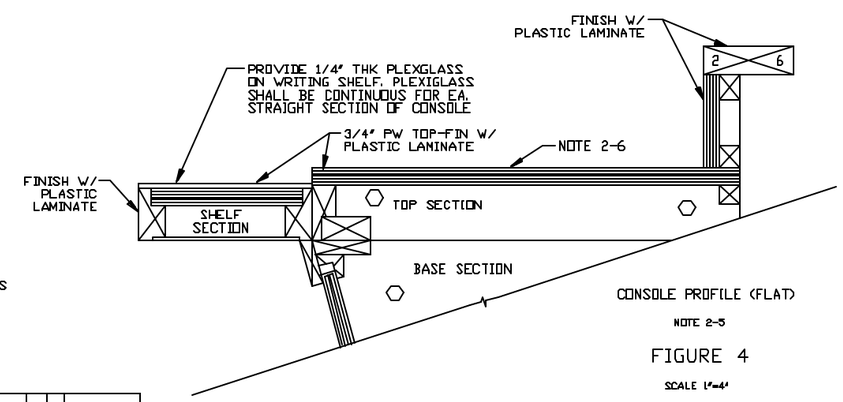

NOTE 2-5

FIGURE 4

SCALE 1"=4"

INSTALLATION NOTES:

2-1 EA LIFTOUT PNL TO HAVE TWO HANDLES APPROX. 7" FROM TOP OF PNL.

2-2 SHELF SECTIONS TO BE BOLTED TO TOP SECTIONS W/ 3/8" BOLTS, NUTS AND FLATWASHERS ON 18" CENTERS.

2-3 BOLT TOP AND BASE SECTIONS TOGETHER W/ 3/8" BOLTS, NUTS AND FLATWASHERS POSITIONED APPROX. AS SHOWN

2-4 PLASTIC LAM COLOR/GLOSS: TOP AND SHELF LIGHT BEIGE. LUSTER-LESS, BASE SECTION DARK WALNUT WOOD GRAIN,SEMI-GLOSS.

2-5 APPLY AN APPROVED FIRE RETARDANT TO ALL EXPOSED WOOD SURFACES WITHIN THE CONSOLE. APPLY NUMBER OF COATS IN ACCORDANCE WITH MANUFACTURERS INSTRUCTIONS FOR MAXIMUM PROTECTION.

2-6 WHERE HOLES ARE CUT FOR EQUIPMENT, COVER EXPOSED EDGES OF WOOD WITH FIRE RETARDANT. APPLY NUMBER OF COATS IN ACCORDANCE WITH MANUFACTURERS INSTRUCTIONS FOR MAXIMUM PROTECTION.

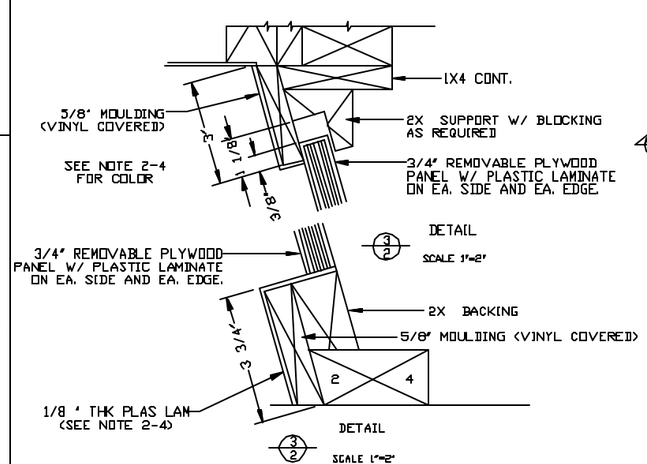

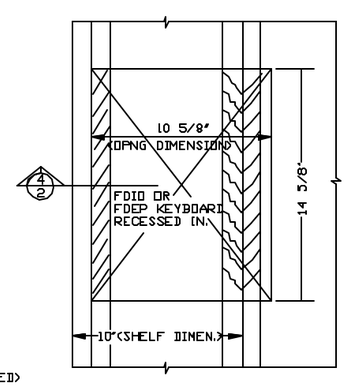

DETAIL "A"

TOP VIEW FDEP

SCALE 3"=1'

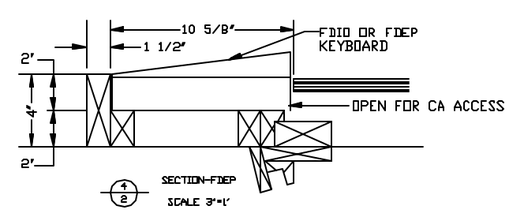

DISTRIBUTION AUTHORIZED TO U.S. GOVERNMENT AGENCIES AND THEIR CONTRACTORS; FOR ADMINISTRATIVE OR OPERATIONAL USE, 1 MAY 1986. OTHER REQUESTS FOR THIS DOCUMENT SHALL BE REFERRED TO 3B MSS/EGD.

NEXT ASSY	USED ON
APPLICATION	

UNLESS OTHERWISE SPECIFIED DIMENSIONS ARE IN INCHES TOLERANCES ON FRACTIONS ± DECIMALS .XX ± .XXX ± ANGLES ±

DR	JUDD	17 MAY 95
CHK	NELSON	17 MAY 95
ENG		
AIR FORCE AUTHENTICATION		
	O'PECKO	17 MAY 95
AIR FORCE RELEASE		

U.S. AIR FORCE
38 ENGINEERING INSTALLATION WING (AFMC)
3B MSS/EGD TINKER AFB, OK 73145-2713

TITLE
AIR TRAFFIC CONTROL TOWER
WRAP AROUND CONSOLE
MCP PROGRAM

SIZE	AIR FORCE CODE IDENT NO	DRAWING NO.
D	14941	SK SCCS-3

SCALE NOTED | SKSCCS02.DGN | SHEET 2 OF 8