REVISIONS			
LTR	DESCRIPTION	DATE	APPROVED
A	ADDED: DETAILS/FIGURES & SHEET 2 REVISED: CABLE SUPPORT DELETED: DFTSMN: PARKER ENGR: PARKER CHKR: PROJ. ENGR:	13NOV95	WPP

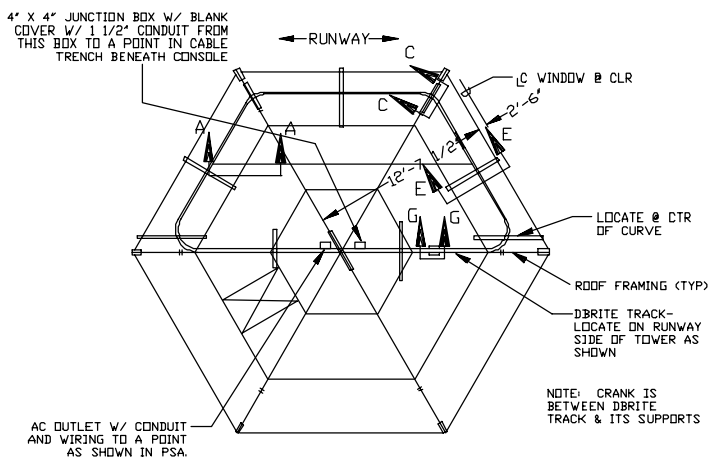

FIGURE 1
DBRITE TRACK PLAN @ CAB ROOF FRAMING

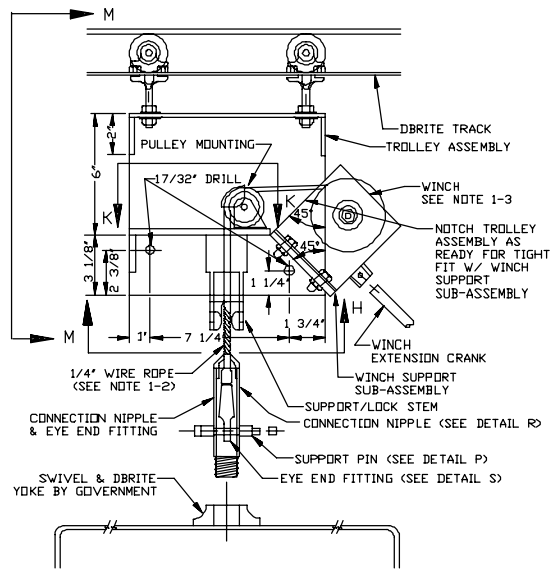

SECTION G-G DBRITE CARRIER & WINCH MOUNTING

GENERAL NOTES:

1-1. TROLLEY-ASSEMBLY MATERIAL IS 1/4" COLD ROLLED STEEL (ALL WELDED).

1-2. 1/4" WIRE ROPE-USE EXTRA FLEXIBLE HOISTING ROPE, 8 X 19 CONSTRUCTION.

1-3. WINCH: 500 LB CAPACITY, WORM GEAR W/ AUTOMATIC SELF-LOCKING BRAKE, HAND CRANK W/ ADJUSTABLE HANDLE.

1-4. TRACK SYSTEM: L 3/4 " X 2 5/16 " X 11" GAUGE STEEL TRACK WITH JOINT BRACKETS AND HANGING BRACKETS AS REQUIRED BY MANUFACTURER

1-5. CARRIERS: 2-WHEEL BALL BEARING TYPE W/ THREADED STEM, 125 LB CAPACITY PER CARRIER

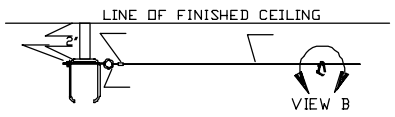

SECTION A-A CABLE SUPPORT

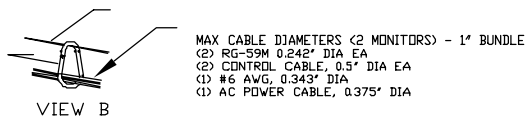

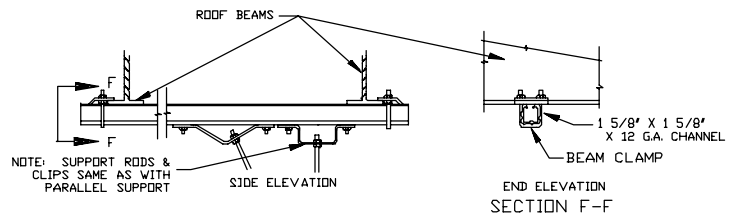

SECTION F-F

(ROTATED 30 DEGREES C.W.)
SECTION E-E PERPENDICULAR TRACK SUPPORT

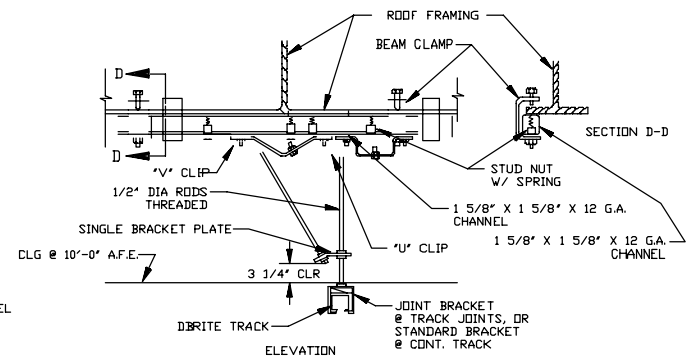

(ROTATED 60 DEGREES C.W.)
SECTION C-C PARALLEL TRACK SUPPORT

FOR REFERENCE ONLY

REV STATUS	REV	A	A
OF SHEETS	SHEET	1	2

CURRENT CODE IDENT NO. | NEXT ASSEMBLY | USED ON | APPLICATION

UNLESS OTHERWISE SPECIFIED DIMENSIONS ARE IN INCHES-TOLERANCES ON: FRACTIONS ± DECIMALS .XX± .XXX± ANGLES ±

DR PARKER 31 AUG 95
CHK PARKER 31 AUG 95
ENG
AIR FORCE AUTHENTICATION PARKER 31 AUG 95
AIR FORCE RELEASE

U.S. AIR FORCE
HQ 38 ENGINEERING INSTALLATION GROUP (AFMC)
HQ 38 EIG/EICF TINKER AFB, OK 73145-2713

TITLE
DBRITE TRACK
INSTALLATION DETAILS

SIZE D | AIR FORCE CODE IDENT NO 13035 | DRAWING NO. LDBWSSK-95-1
SCALE | LDBWS-SK-95.DGN | SHEET 1 OF 2

REVISIONS			
LTR	DESCRIPTION	DATE	APPROVED
A	ADDED: DETAILS/FIGURES & SHEET 2 REVISED: CABLE SUPPORT DELETED: DFTSMN: PARKER ENGR: PARKER CHKR: PROJ. ENGR:	13NOV95	WPP

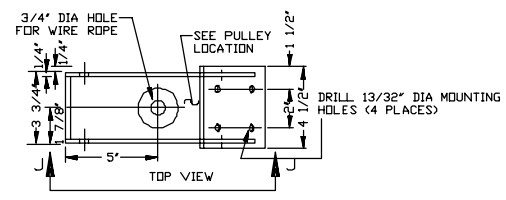

SECTION H-H WINCH SUPPORT SUB-ASSEMBLY

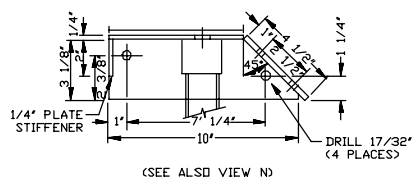

SECTION J-J WINCH SUPPORT SUB-ASSEMBLY

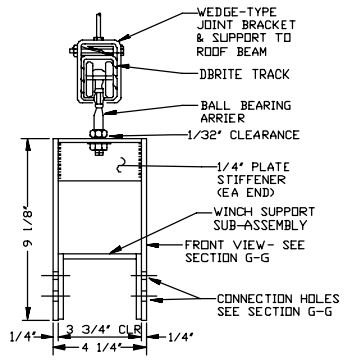

SECTION M-M TROLLEY ASSEMBLY

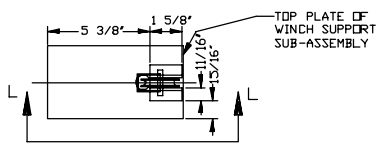

SECTION K-K PULLY MOUNTING

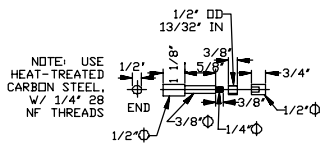

DETAIL P SUPPORT PIN

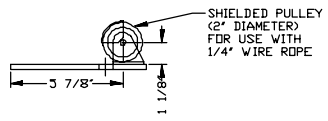

SECTION L-L PULLEY FRONT VIEW

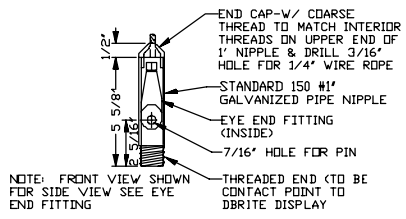

DETAIL R CONNECTION NIPPLE

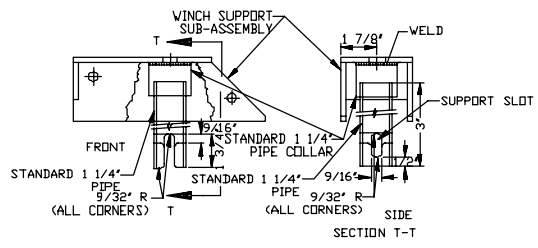

VIEW N SUPPORT/LOCK STEM

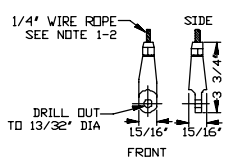

DETAIL S EYE END FITTING

FOR REFERENCE ONLY

CURRENT CODE IDENT NO. | NEXT ASSEMBLY | USED ON | APPLICATION

UNLESS OTHERWISE SPECIFIED DIMENSIONS ARE IN INCHES-TOLERANCES ON: FRACTIONS ± DECIMALS .XX± .XXX± ANGLES ±

DR PARKER
CHK PARKER
ENG PARKER
AIR FORCE AUTHENTICATION
AIR FORCE RELEASE

U.S. AIR FORCE
HQ 38 ENGINEERING INSTALLATION GROUP (AFMC)
HQ 38 EIG/EICF TINKER AFB, OK 73145-2713

TITLE
DBRITE TRACK
INSTALLATION DETAILS

SIZE D | AIR FORCE CODE IDENT NO 14941 | DRAWING NO LDBWSSK-95-1
SCALE | SHEET 2 OF 2