REV	DESCRIPTION	DATE
-	ORIGINATED. ProENGINEER DATA BASE RELEASED PER EOG	2000-05-1

CAD MAINTAINED. CHANGES SHALL BE INCORPORATED BY THE DESIGN ACTIVITY.

NOTES

1. THE ADAPTER AND CLAMPS INDICATED HAVE TO BE FABRICATED SEPARATELY FOR EACH SITE INSTALLATION. SHEET 2 INDICATES THE ADAPTER AND CLAMP CONSTRUCTION. DURING THE SITE SURVEY FILL IN THE VALUES FOR DIMENSIONS A, B AND C ON SHEET 2 OF THIS DRAWING AND SEND OUT FOR FABRICATION
2. DIMENSION A IS THE DISTANCE BETWEEN THE ROOM SIDE OF THE SUSPENDED CEILING AND THE BOTTOM FLANGE OF THE TOWER CAR I-BEAM TO WHICH THE ARM IS TO BE MOUNTED
3. FOR PROPER OPERATION OF THE ARM (TO MINIMIZE INTERFERENCE WITH THE CEILING DURING MONITOR POSITIONING), THE ADAPTER MUST BE MOUNTED PERPENDICULAR WITH THE SURFACE OF THE CEILING. THIS MAY REQUIRE SHIMMING BETWEEN THE I-BEAM AND THE ADAPTER PLATE. A CARPENTER'S LEVEL AND SQUARE MAY BE REQUIRED TO ACHIEVE THIS PERPENDICULARITY. USE STEEL SHIM STOCK IF SHIMMING IS REQUIRED.
4. ALL HARDWARE ASSOCIATED WITH THE ADAPTER MOUNTING MUST BE TIGHTENED SECURELY
5. AFTER INSTALLATION OF THE ARM AND MONITOR, ROUTE INTERFACING CABLES ALONG THE ARM MECHANISM FROM THE CEILING TO THE MONITOR AND NEATLY SECURE WITH TIE-WRAPS. BE SURE THAT THE CABLES DO NOT INTERFERE WITH THE MOVEMENT OF THE ARM AND THAT THE MOVEMENT OF THE ARM DOES NOT DAMAGE THE CABLES

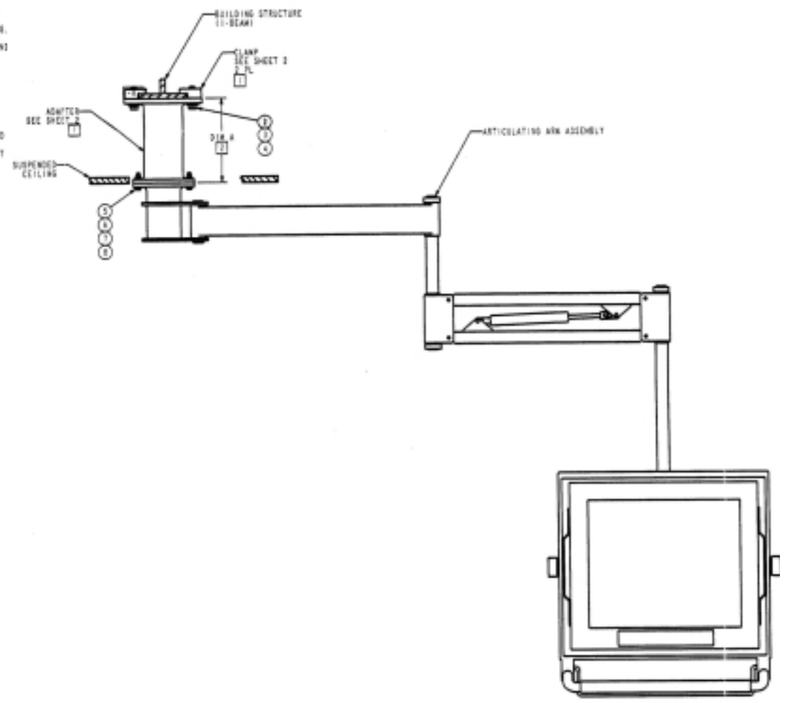

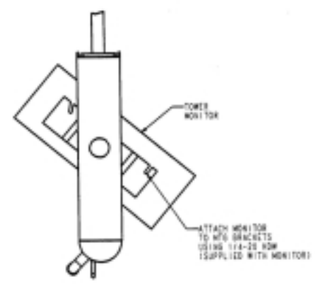

PRELIMINAR
CHECK PL
2000-05-2

SEPARATE PARTS LIST PL0782650-1

PART NO. G7

PARTS LIST

UNLESS OTHERWISE SPECIFIED DIMENSIONS IN INCHES TOL ON ANGLE ± 1° X.X ± .02 X.XX ± .01 (INTERPRET X.XX AND .XX PER ANSI Y14.5M-1982)

FINISH AREA PROTECTION

INTERPRET DRAWING IN ACCORDANCE WITH MIL-STD-100, ANSI Y14.5M

DRAWN BY	K. MOORE 2000-05-1
CHK	K. STANLEY YYYYMMDD
ENGR	T. TEASDA YYYYMMDD
MFG	YYYYMMDD
QUAL	YYYYMMDD
	YYYYMMDD
	YYYYMMDD
	YYYYMMDD
	YYYYMMDD

Raytheon

RAYTHEON C
LEXINGTON

TITLE CEILING MOUNT
INSTALLATION KIT DR

SIZE A

CAGE CODE E 49956

DRAWING NO G78265

SCALE: 1:1

SHEET 1 OF 1